FC-D-446/1-450mW

BLUE DIODE LASER FOR RAMAN SPECTROSCOPY AT 446nm

With narrow spectral bandwidth, spectral purity and a high level of wavelength stability, FC-D-446 laser module is designed specially for Raman spectroscopy, which has integrated laser drivers and thermoelectric coolers together, its compact dimension and convenient functions make it optimal for industrial and medical applications.

SPECIFICATIONS

Model	FC-D-446 (Spectrum Stabilized for Raman Spectroscopy)
Central wavelength (nm)	446±0.5
Spectral line width (nm)	0.1, (0.06 optional)
Operating mode	CW
Fiber core diameter	100μm, 0.22 NA
Fiber connector	SMA905, FC/PC optional
Fiber length[1]	1m
Fiber jacket	Metal, PVC optional
Output power after fiber (mW)[2]	1-450
Power stability (rms, 4 hours ± 3°C)	<3%, <2%, <1%
Frequency shift (pm) (over ±2°C and 2hrs)	<20
Noise of amplitude (rms, 20Hz-20MHz)	<1%
Warm-up time (minutes)	<5
Cooled method	Air cooled
Operating temperature (°C)	20-30
Operating voltage (VDC)	5V/6A
Expected lifetime (hours)	>10000

LASER HEAD (DRIVER Integrated)[3]	POWER SUPPLY (100-240VAC) optional
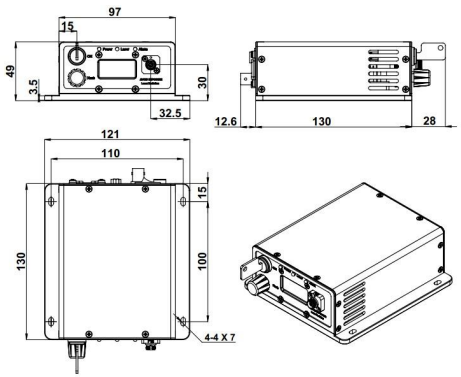 170.6 (L) ×121 (W) ×49 (H) mm³, 1.0kg	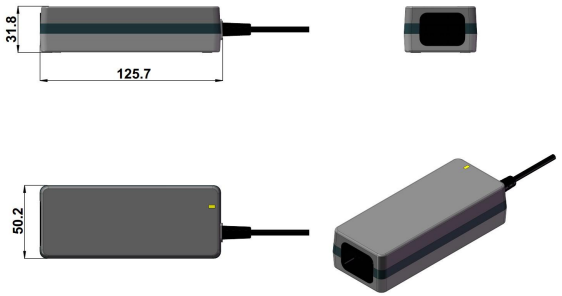 125.7 (L) ×50.2 (W) ×31.8 (H) mm³, 0.3kg

1 Other lengths are available on request.

2 Any power level can be selected in this range.

3 Output power adjustable 10-100%; RS232 control optional.

Website: http://www.cnilaser.com E-mail: sales@cnilaser.com Tel: +86-431-85603799 Fax: +86-431-89216068